Brain Computer Interface for Home Automation to help Patients with Alzheimer's Disease

Ahalya Mary J [1], Parthsarthy Nandi [2], Ketan Nagpure [3], Rishav Roy [4], Bhagwan Kishore Kumar [5]
[1] Assistant Professor (O.G), SRM Institute of Science and Technology, Ramapuram, Chennai, Tamil Nadu, India.
[2, 3, 4, 5] Student, SRM Institute of Science and Technology, Ramapuram, Chennai, Tamil Nadu, India.

Abstract - The brain computer interface is a way of communication between the human brain and different appliances. BCI helps in the restoration of natural moments of the human body with respect to the neural signals in an artificial manner. Brain emits different signals with multiple frequency and amplitude. The signal generated by brain was received by the brain sensor and it will divide into packets. The packet data is then transmitted through wireless medium (blue tooth). The Raw Data i.e., the EEG signals are received by the level analysis platform which is a MATLAB GUI. This GUI will convert the signal for the operation of the Home Application modules. The working of the Home Application module works on the muscle contraction while blinking which act as ON/OFF. Now when a person suffering from the starting phase of dementia i.e., Alzheimer's can use the BCI for accomplishing different day to day works using the above method.

Index Terms – Brain computer interface (BCI), Electroencephalogram (EEG) signals, Alzheimer disease, short-time Fourier transform (STFT), ThinkGear ASCI Module (TGAM), ARM Processor

1. INTRODUCTION

Many advancements have been made in the field of incorporating the Brain waves with different applications from day to day life. Aiming the same here we will be using brain wave signals to control different appliances. BCI technology can be used to employ cloud computing[6], visible light communication[4], smart home[4] etc. Studies show that electronic gadgets can be controlled through thoughts[1]. But there are many conditions where the subject may or may not be able to do so. Like a patient suffering from Pattison disease or Alzheimer disease the patient do not have a control of what he or she is thinking, he would also be unable to coordinate between what he thinks and muscles etc. So to help those patient we have we have figured out the way of using eye blinking for accomplishing the task. Here blinking of eye will provide different frequencies which will be processed and the ON and OFF function will be carried out.

Different types of BCI[3] are discussed below.

1.1 Dependent and Independent BCI:

When the output of BCI depends on the output from any muscular movement it is termed as the dependent BCI. The best example is the wheelchair which was used by Stephen Hawking, where the BCI works in order to the eye movement. Independent BCI on the other hand do not depend on any external factors except what the subject is thinks to do.

1.2 Invasive and Non-Invasive BCI:

This type is based on the way of planting the electrodes. Invasive BCI are those where the electrodes are planted with surgical process under the scalp. Whereas, in non-invasive BCI the electrodes are placed on the scalp.

1.3 The Emotiv Education Edition SDK [3]:

The Education Edition SDK by Emotiv Systems includes a research headset: a 14 channel (plus CMS/DRL references, P3/P4 locations) high resolution, neuro-signal acquisition and processing wireless neuro headset as shown in fig 1.

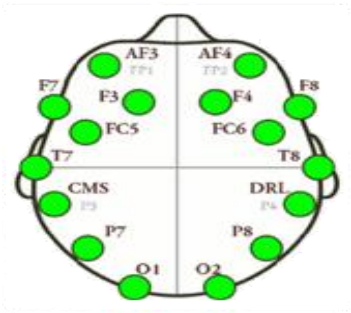

Figure 1

Here we will consider the Dependent Non-Invasive BCI over others. Dependent BCI will be helpful for a patient with dementia because the subject can indicate what he needs at a point of time and the system can perform the task where the processor will be analyzing about what he thinks and the movement of the eye/eye blinking. Eye blinking act as the verification code here which authenticates the processor to perform the task. But if we are using a independent BCI it will be difficult for the processor to decide what the subject wants, as the person usually suffering with Dementia have abnormal thinking. Which in turn will be situation of dilemma for the processor of what he actually want.

Communication with a human or a machine is always been a challenge with a patient who is suffering with Alzheimer's disease. During different stages of the disease the patient start

facing different problems from difficulty in speaking to barely able to utter word and from difficulty in muscular moment to coordination in the moment. Usually in those stages the patient is have only two brain states first is the emotion and the later is the cognitive state("yes" or "no")[2]. Hence in those situation the BCI can help them to perform a certain task with the help of emotions and eye gazing or blinking gesture.

2. WORKING OF THE PROPOSED SYSTEM

2.1. Training of the Patient

When the patient is detected with stage 1 dementia. The subject is still in a position where he can make small decisions and can be trained to do a particular work to record his brain wave signals. Like we can ask him to think about switching on a fan and blink a eye if he really want to do it. Now while he performs the task the neurons will be producing EEG signals which can be used for analyzing the value which will be further used for find the threshold value for switching a fan. Now when the patient reaches the final stage he can use the BCI system which already stores the values which can be used for operation.

The training can be performed by two ways the imagined method and the executed one[1]. Here we will be using the imagined way with consideration that the subject do not have a perfect neuro muscular moment. The process goes like this. The subject is asked to imagine that he wants to switch on the fan now once he does for verification he is asked to blink the right eye and if no then the left one. While he does the same the brain produces(Refer figure 2 for origin of EEG Signals) sets of EEG signals which are received by the Electrodes and are sent using Bluetooth.

2.2. Efficiency of Bluetooth

Bluetooth is being used here because through Bluetooth we can establish a personal area network. Also the power consumption can be reduced using Bluetooth.

2.3. Brain Wave Sensor[6]

TGAM is the brain wave sensor which we are using for collecting the brain wave signals. The TGAM processes and outputs EEG frequency spectrums, EEG signal quality, raw EEG, and three NeuroSky eSense meters attention; meditation; and eye-blinks. With simple dry electrodes, this module is excellent for use in toys, video games, and wellness devices because of its low power consumption, which is suitable for portable battery-driven applications.

TGAM: ThinkGear ASIC Module:

- Directly connects to dry electrode (as opposed to conventional medical wet sensors).
- One EEG channel with three contacts: EEG; REF; and GND.
- Improper fit detected through "Poor Signal Quality" warning from ASIC to reset if off the head for four consecutive seconds, or if it is receiving a poor signal for seven consecutive seconds.
- Advanced filtering technology with high noise immunity.
- Low power consumption suitable for portable battery-driven applications.
- Max power consumption 15mA at 3.3V.
- Raw EEG data output at 512 bits per second.

What the TGAM Measures?

- Raw brainwave signal.
- Processing and output of EEG power spectrums (Alpha, Beta, etc.).
- Processing and output of NeuroSky proprietary eSense meter for Attention, Meditation, and other future meters.
- EEG/ECG signal quality analysis (can be used to detect poor contact and whether the device is off the head).
- Eyeblink detection.

2.4 ARM Processor

- 16/32-bit ARM7TDMI-S microcontroller in a tiny LQFP64 or HVQFN package.
- 8/16/32 kB of on-chip static RAM and 32/64/128/256/512 kB of on-chip flash program memory.
- 128-bit wide interface/accelerator enables high-speed 60 MHz operation.
- In-System Programming/In-Application Programming (ISP/IAP) via on-chip bootloader software.
- Single flash sector or full chip erase in 400 ms and programming of 256 B in 1 ms.
- Embedded ICE RT and Embedded Trace interfaces offer real-time debugging with the on-chip Real Monitor software and high-speed tracing of instruction execution.

Now once the hardware is studied thoroughly and is being installed, the subject performs the task as instructed which produces Synchronous EEG signals with respect to the movements as shown in figure 4. The EEG signals produced by the brain are then sent to the processor where the Matlab

GUI converts it to signals which is then used to communicate with the peripherals.

2.5 Architecture Design

The whole process from detecting the Brain Wave signal to carried out by following the design proposed below in figure 3. Where the Dry electrodes are planted on the skull of the subject and he imagine the thing which he want to accomplish like switching on a fan. Now the threshold values are already stored in the system for switching. Now whenever he thinks so the EEG signals are received by the dry electrodes and sent to the Raw Data receiver and processor using a Bluetooth. In the processing unit the Matlab.

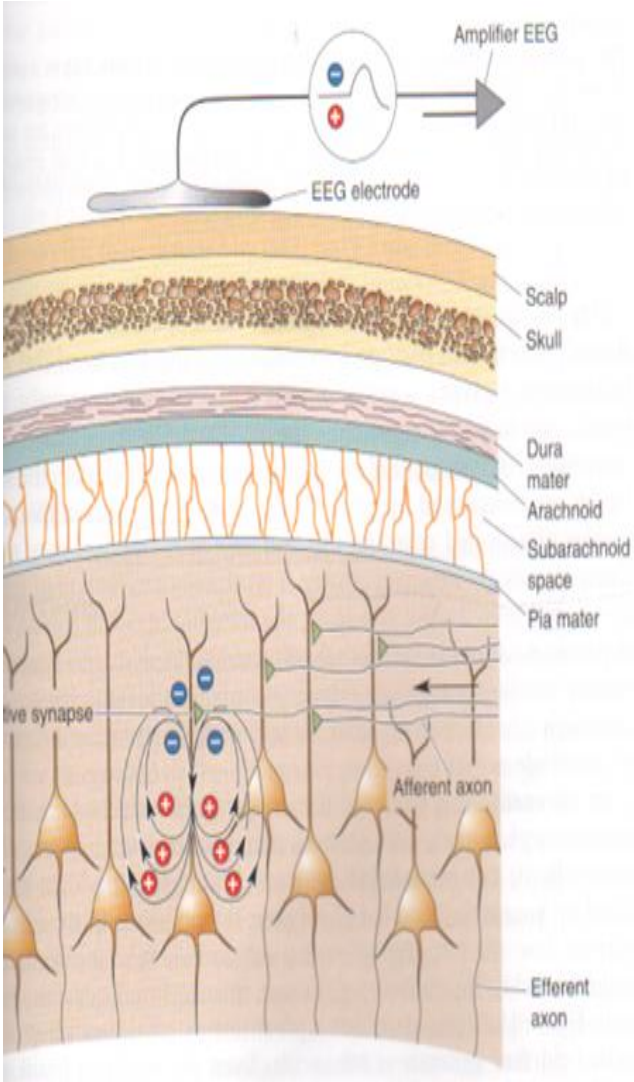

Figure 2 Origin of EEG signals

GUI processes the data to find a signal which is then sent to the TGAM processor where the new values are compared with the stored one and the decision is made about which task has to be performed.

3. LIMITATIONS

Every great system have few limitations under which it works perfectly. So, as this one too! In the above system the patient should be at stage 1 Alzheimer's so that he can be able to follow the instructions given to him. Patients suffering from the advanced stage of Alzheimer's are not suitable for this process as he may not be able to follow the instructions given to him. At such stage the patient is either not able to utter words or left to mutism. In those situation the BCI can only be used to tell about the mental state of the patient but not for a perfect medium of communication between the brain and the hardware peripherals.

4. TOOLS TO BE USED

- KEIL IDE
- MATLAB
- OrCAD Design
- Language: Embedded C

5. IMPLEMENTATION

5.1 Hardware configuration

- First the Bluetooth of the brain wave sensor is connected with computer.
- Once it is done now we have to check the port number at which the Bluetooth is connected with computer. This port number is the passage at which the data transfer is being carried out between the brain sensor and the level analysis platform.
- Now we have to include the port number in the Matlab program to make the connection between the program with the sensor. By doing so now the EEG signals detected by the sensor will be used by the computer to measure the signal strength.
- Now the Microcontrollers are being connected with the computer using a RS232 cable and the port number is included with the code to make a connection between the Brain Sensor with Level Analysis platform(Computer with Matlab) with Microcontrollers.

Now, the subject is asked to wear the Brain Sensor, now to check the strength of the signals and to check the activity he is asked to blink his eye. When he do so Matlab checks the signal strength. Once it is matched the modules are ready to be use.

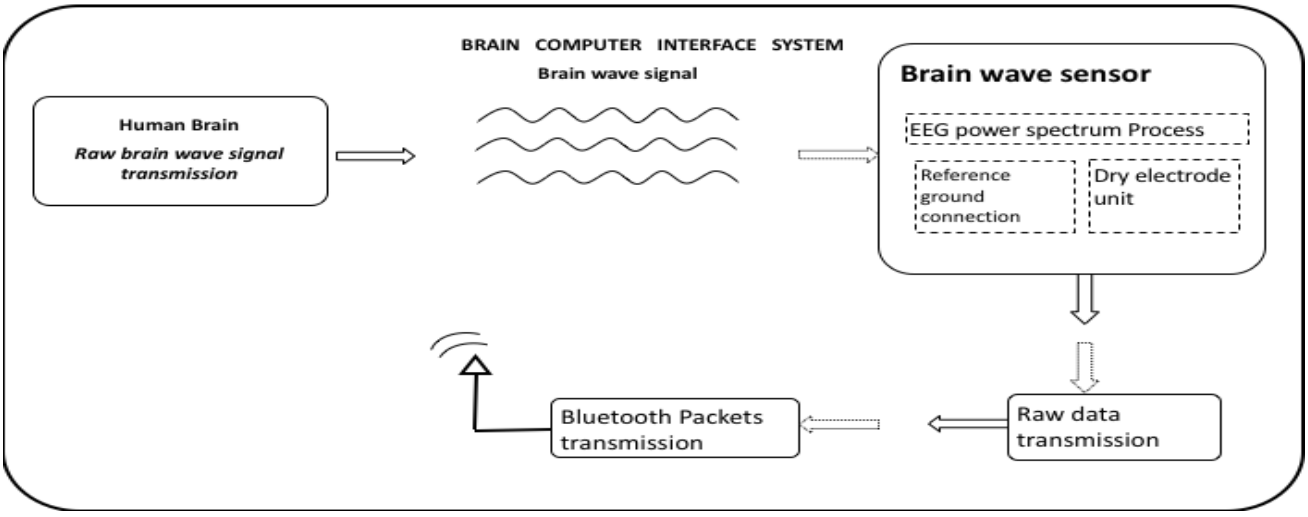

3(A)

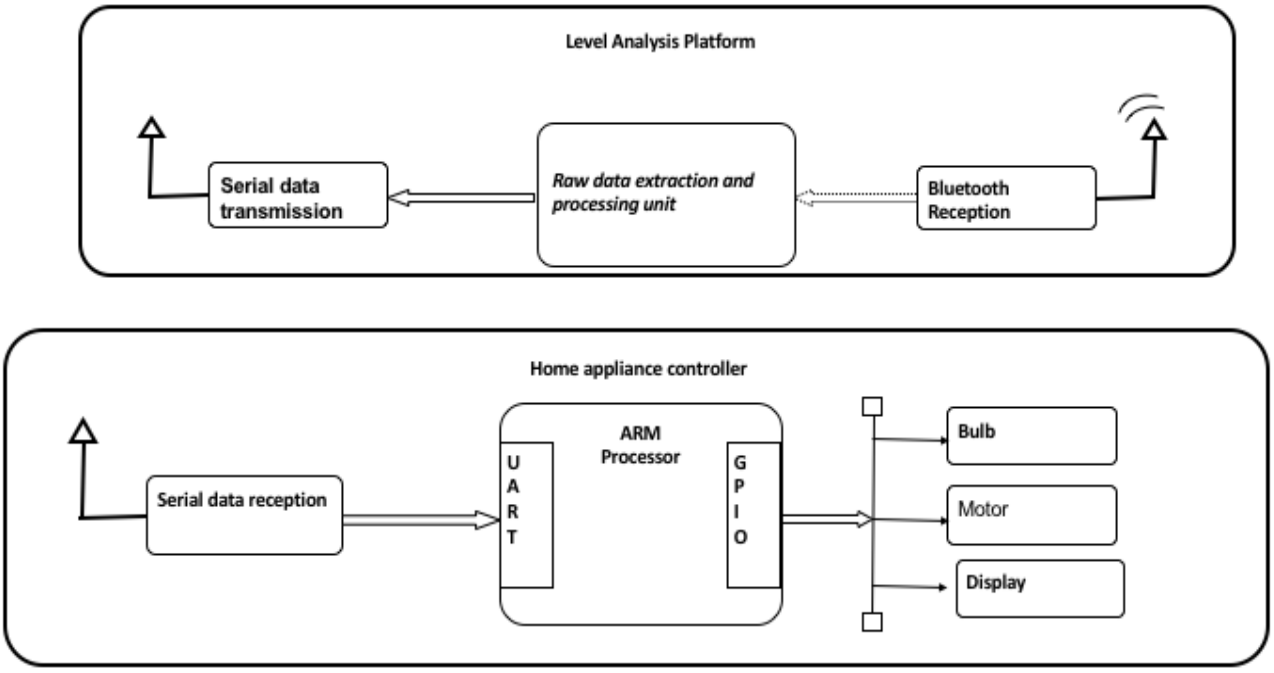

3(B)

Figure 3 Architecture Diagram

Now the subject can blink his eye for controlling the bulb or the motor which is connected to the circuit.

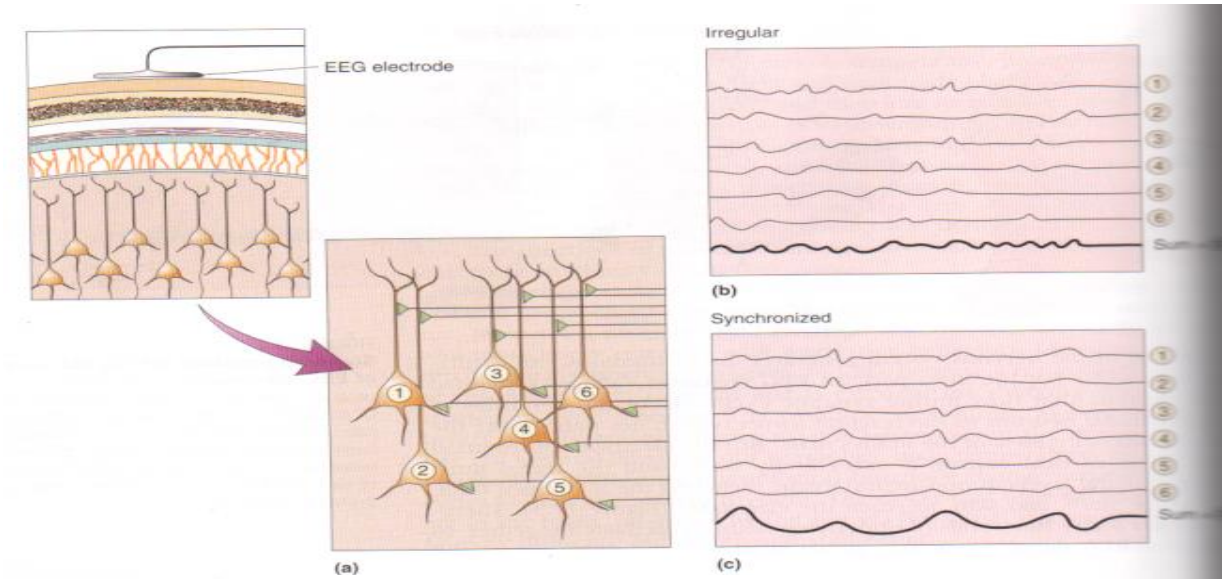

Figure 4

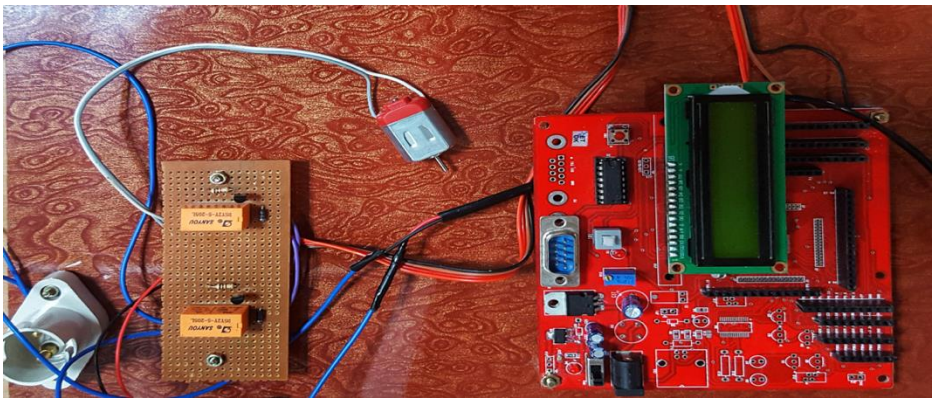

Figure 5 Hardware

6. RESULT

The subject at first blinks for 1 minute which is used to check the number of blinks made if it is close to 60 the signal strength is strong. Once it is done now the subject will think of an option whether to switch on the Bulb or the Motor and will Blink as required for controlling the device. By performing the above operations we can control the switching of the home appliances.

7. APPLICATIONS

The BCI system which is proposed below can be used for other purposes also apart from helping a mentally ill or a physically challenged person. It can be used for Automobile Applications, Industrial Application, Monitoring device applications, Remote control applications, Robotic arm control etc.

8. FUTURE SCOPE

BCI is an emerging technology for helping people from aspects. Precisely for patient suffering from Alzheimer's if research made further it can save many life's as, if somehow the Brain signals are collected and used for performing the task perfectly then it can be very helpful to the caretakers of the patients.

REFERENCES

[1] M. H. F. Zakaria, W. Mansor and Khuan Y. Lee "Time-Frequency Analysis of Executed and Imagined Motor Movement EEG Signals for

Neuro-based Home Appliance System" Proc. of the 2017 IEEE Region 10 Conference (TENCON).

[2] Giulia Liberati , Josu´e Luiz Dalboni da Rocha, Linda van der Heiden, Antonino Raffone, Niels Birbaumer, Marta Olivetti Belardinelli and Ranganatha Sitaram "Toward a Brain-Computer Interface for Alzheimer's Disease Patients by Combining Classical Conditioning and Brain State Classification" Journal of Alzheimer's Disease.

[3] Anupama.H.S, N.K.Cauvery and Lingaraju.G.M "Brain Computer Interface and its type - A study" International Journal of Advances in Engineering & Technology.

[4] S. V. Tiwari, A. Sewaiwar, and Y. Chung, "Smart Home Technologies using Visible Light Communication", IEEE International Conference on Consumer Electronics, 2015, pp 379-380.

[5] H. Gua, Y. Diaob, W. Liuc, X. Zhang, "The Design of Smart Home Platform Based on Cloud Computing", IEEE International Conferenceon Electronic & Mechanical Engineering and Information Technology, 2011, pp 3919-3022.

[6] "TGAM Datasheet" Copyright NeuroSky Inc 2011.

[7] Jingjum Wang , Yadong Liu, Jingsheng Tang " Fast Robot Arm control based on Brain Computer Interface" IEEE 2016.

[8] Anupama A. Ghodake, S.D. Shelke "Brain Controlled home Automaton Syatem".